ISSN 2395-1621

Scrap Handling System Using Magnetic Belt Conveyor

#1Salunkhe S. G., #2Patel S. R., #3Shewale K. A., #4Kambale A. R.

1srgraj100@gmail.com
2sumitpatel.patel7@gmail.com

#12Mechanical Department, SavitribaiPhule Pune University,
ISB&M School of Technology ,Nande Pune

ABSTRACT

This project focuses on a conceptual design of a conveyor system, which helps to differentiate metallic and non-metallic materials, as well as to perform transferring of the mentioned materials. The first phase of project was research on metallic waste sorting machines in the market like magnetic conveyor system. A conveyor system is mechanical handling equipment that moves materials from one location to another and magnetic pulley has been used to separate metal and non-metal waste. Design of the conveyor has done using CATIA Software. The expected outcome of this research work is a fully automated conveyor system that will be useful for metallic waste management application.

Keywords—Design of conveyor frame, magnetic belt conveyor, conveyor system, metal and non-metal waste

ARTICLE INFO

Article History

Received :29th February 2016

Received in revised form :

1st March 2016

Accepted : 4th March 2016

Published online :

6th March 2016

I. INTRODUCTION

Scrap metals, in general, are divided into two basic categories

1. Ferrous Scrap
2. Non-Ferrous Scrap

Ferrous scrap are metals that contains iron i.e. magnetic materials,

Non-Ferrous scraps are metals that does not contain iron i.e. not magnetic material.

Common Sources of Recycled Metals

Ferrous scrap comes from sources such as:

- Mill scrap (from primary processing).
- Used construction beams, plates, pipes, tubes wiring, and shot.
- Old automobiles and other automotive scraps.
- Boat scrap, railroad scrap, and railcar scrap.
- Miscellaneous scrap metal.

2.2 Types of scrap metals

The metal industry is divided into ferrous and non-ferrous metals (Turkish Metal Industry Report, 2010). The scrap metal industry is also classified along these two kinds of metals.

2.2.1 Ferrous scraps

Ferrous scraps comprise metals containing iron. Iron and steel scrap play an important role in the processing and final production of new ferrous products. Recycling of ferrous scraps prevent the environmental burden of large accumulations of scrap building up in landfill sites and other disposal areas. Recycling is also energy efficient. It is estimated that every tonne of steel that is recycled saves approximately 1,000,000 kg of iron ore, 600 kg of coal and 54 kg of limestone (Emery et al., 2000). This results in reduced mining activities for the raw materials, again reducing the environmental burdens. Other environmental benefits occur in the form of 86% less air pollution, 76% less water pollution, 40% reduction in water used, and a 1.28 tonne reduction in the generation of solid wastes (Emery et

al., 2000).Sources of ferrous scraps for recycling can be broadly classified into three (Fenton, 1998; Javaid and Essadiqi, 2003):

1. Internal Arising Scrap – these include reject materials from casting, rolling mill and other manufacturing processes. With more efficient steel production, these scrap quantities have fallen over recent years.

2. Prompt Industrial Scrap — scrap is produced from normal machining, stamping and other fabrication operations, normally of a fairly high quality. In a large number of cases, manufacturers sell directly to steel makers.

3. Obsolete or Capital Scrap – when a product has served its useful life and is then discarded. Large scale examples are decommissioned power stations, shipping fleets down to small-scale examples such as cars and domestic appliances. With the restructuring of the developed world's base towards a lighter industry the main resource has now shrunk considerably. Domestic appliances are a valuable source of scrap for recycling but firstly need other non-ferrous elements to be removed, such as tin and copper. These elements can be detrimental to the steel, altering the strength and surface quality. More than one million tonnes of electrical goods are produced each year with many having a life cycle of 10 years or less (The Ends Report, 2000). Plastics also now play a great part in the manufacture of domestic appliances and cars with the gauge of steel being ever decreased. Structural steel is also being reduced in thickness in the construction industry all adding to reduced quantities of scrap.

2.2.2 Non-ferrous scraps

Non-ferrous scrap comprises metals that do not contain iron. New changes in modern technology have reduced quite substantially the amounts of non-ferrous scrap generated as products are being made from thinner gauge metal and also with the increased use of other materials such as plastics for products including drink cans and plumbing. The most common non-ferrous metals that are recycled and are traditionally found and segregated in domestic waste in sufficiently large quantities are aluminium, copper, lead and brass. Aluminium is the most abundant metal (by volume) found in domestic waste, consisting mainly of drink cans (Emery et al., 2000). Sources of non-ferrous scraps can also be grouped into three, similar to that of ferrous metals. Source of aluminium scraps include vehicle and transportation, construction and building sites, aluminium packaging waste, cable wire and electronic equipment from homes (Emery et al., 2000; Muchová and Eder, 2010).

2.3 Scrap Metal Recycling Steps

2.3.1 Scrap collection

Scrap collection is the first step in recycling of metals. Scrap metal collection is largely performed by young men in their teens and twenties. Collection usually spans from early hours of the morning to late in the afternoon lasting about eight hours daily. Scrap metal collectors may usually go as individuals or in groups of two. The method of scrap collection varies from the use of simple technological tools to the use of the hands. Scrap metals are usually collected from the land surface with the hand and stored in the houses after collection for sale later depending on the situation in the local area (Moyes, 2005). Simple tools like metal detectors are often used for metals hidden underneath the land surface. The use of magnetic detector is paramount in the collection of scraps in that the collectors are able to differentiate between ferrous and non-ferrous scraps. Ferrous scraps are attracted to the magnetic detector when passed over a stockpile of scraps.

II. LITERATURE REVIEW

International Journal of Emerging Technology and Advanced Engineering Website: www.ijetae.com (ISSN 2250-2459, ISO 9001:2008 Certified Journal, Volume 3, Issue 4, April 2013)

Conceptual Design of Automatic Manipulator for Metal and Non-metal Waste Management Application ZolBahri Razali1, Nuraini Yatim2

Waste management is the collection, transport, processing or disposal, managing and monitoring of waste materials. The term usually relates to materials produced by human activity, and the process is generally undertaken to reduce their effect on health, the environment or aesthetics. The management of wastes treats all materials as a single class, whether solid, liquid, gaseous or radioactive substances, and tried to reduce the harmful environmental impacts of each through different methods.

Different countries have different types of industries in their priority list. All the countries are moving from agro-based labour intensive industries to metal based manufacturing and fully mechanized industries. The waste quality and quantities also varies depending on the types of industries and production processes. In Malaysia, 30% of hazardous waste is generated from electroplating and metal industries, where as in Thailand, the largest hazardous waste is generated from metal smelting (47%) and manufacturing (33%) industries (Cirillo et al, 1994). In the current plan of activities, main emphasis is given for the development of agro-industries, textile, clothing, electronics, petrochemical and base metal related industries. Non-ferrous metals don't contain iron for example aluminum, brass, copper, gold, silver and titanium. We can also get non-ferrous metals as alloys for example brass is an alloy of copper and zinc. Non-ferrous metals are specified for structural applications requiring reduced weight, higher strength, nonmagnetic properties, higher melting points, or resistance to chemical and atmospheric corrosion. They are also specified for electrical and electronic applications. Some non-ferrous metals are magnetic if it contain nickel and cobalt. Ferrous metals are metals which contain iron. Ferrous metals may contain small amounts of other elements such as carbon or nickel, in a specific proportion, that are added to achieve the desired properties.All ferrous metals are generally magnetic, have high tensile strength and give little resistance to

corrosion such as steel. According to research conducted by the US Environmental Protection Agency, recycling scrap metals can be quite beneficial to the environment. Using recycled scrap metal in place of virgin iron ore can yield :

- 75% savings in energy
- 90% savings in raw materials used
- 86% reduction in air pollution
- 40% reduction in water use
- 76% reduction in water pollution
- 97% reduction in mining wastes

Every tonne of new steel made from scrap steel saves: 1,115 kg of iron ore, 625kg of coal and 53kg of limestone. Scrap Metal Heritage agrees with Environment Protection Energy EPA's conclusion that scrap metal is a valuable national resource, the recycling of which should be encouraged. In addition, scrap metal has little potential for release of hazardous constituents to the environment.

E. Existing Method to Separate Metal Waste Scrap Metal Heritage agrees with Environment Protection Energy EPA's conclusion that scrap metal is a valuable national resource, the recycling of which should be encouraged. In addition, scrap metal has little potential for release of hazardous constituents to the environment. Lifting magnet Separating the iron and steel from shredded automobiles takes direct advantage of their magnetic properties to isolate them from nonferrous metals and non-metallics. Advances in materials science have led to the introduction of rare earth alloy permanent magnets with high field strength (e.g., neodymium-boron-iron magnets) that require no power to operate and have sufficiently high fields to allow for the recovery of even weakly magnetic stainless steels.Eddy Current Separator.

The Eddy current separator (ECS), is a conveyor tape made with a particular magnetic field in the head, which is generated by high frequency polar wheel: when the non-ferrous metals are coming near to the magnetic field, they are lifted and "expulsed" to one appropriate collecting canal, while the inert materials freely fall down to another container. All iron till the smallest pieces, which differently from the non-ferrous metals, is kept by the magnetic rotor and downloaded in the proper container under the Eddy Current separator. Magnetic Separator Overbelt Magnetic Separator Overbelt is placed crosswise or lengthwise above the conveyor tape at a fixed working distance. From flowing material iron objects are capture by the magnetic power and with the overbelt magnets carried away. When the iron objects leave the area of the magnetic field they automatically drop into appropriate canals or containers. Magnetic Separator with permanent magnets has two categories which are with Ferrite magnets or with Neodymium magnet. Permanent overbelt magnetic separator is free magnet maintenance and no need of electrical current for generation of the magnetic field.

III. EQUATIONS

1. Conveyer

- width of conveyer-300mm.
- length of conveyor- 600mm.
- 2 roller will be used of outer diameter 70 mm length of roller 250 mm.
- No of magnets on conveyer 12 bar magnets.
- Distance between to magnets is 190mm.

2. Driving unit

-Electric motor

3. The conveyer will be hinged at one end Whereas at the other end of inclination can be varied by adjustment.

4.Scarp collection box will be of dimension 300x200x200

5. Wheels used will be having bearing with rubber coated at the exterior.

IV. FIGURE AND TABLE

Diagram shows the concept design model of our conveyer system for handling scrap

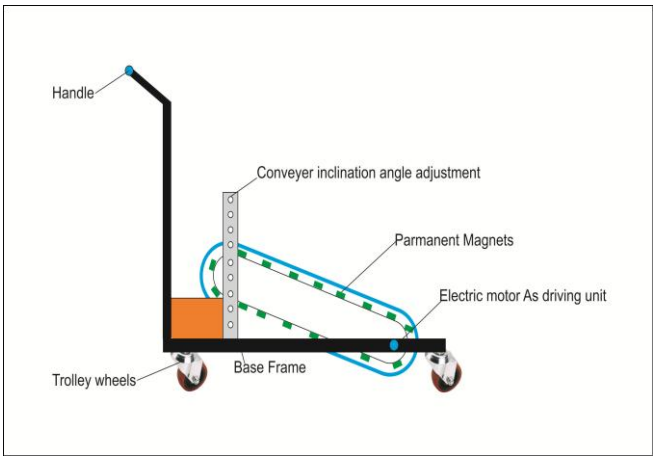

SYSTEM DESIGN

Our complete system is design in CATIA VR20 Software. The above drawing the complete over view of project.

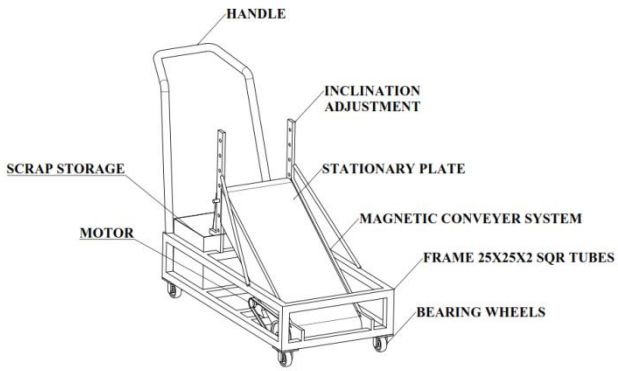

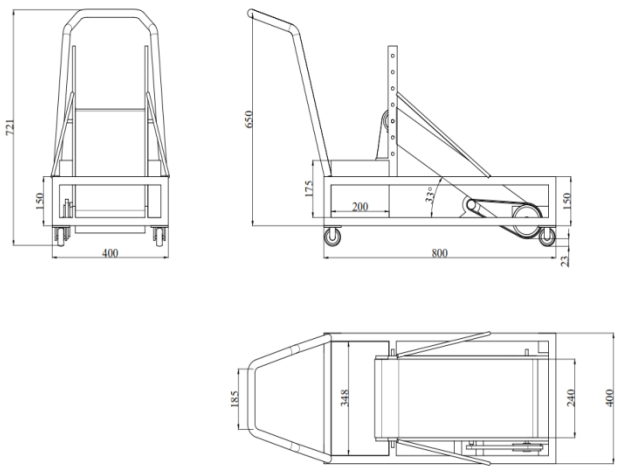

V. CONSTRUCTION

Magnetic slide conveyors feature an oil-filled chain guide which requires no lubrication, a watertight submersible frame, powerful magnet assemblies enclosed in stainless steel and a stainless steel bed. The conveyors have no external moving parts (except the drive), are easily installed and are virtually maintenance free!

- A stable, encased supporting structure
- Low-maintenance roller chains
- High-performance magnetic systems
- An anti-magnetic stainless steel slide surface
- A reversing unit with automatic chain tensioning
- A drive unit with drive motor

Magnetic slide conveyors are manufactured to low-maintenance standards in a number of widths and heights.

VI. IMPLEMENTATION OF PROJECT WORK PROCESS FLOW

Selection of magnets

↓

Selection of type of conveyer system

↓

Distance to be maintained between to magnets

↓

Length & Width of conveyer system

↓

Height of conveyer system

↓

Scrap storage trolley Position

VII. FUTURE SCOPE

This project is focuses on a conceptual design of a conveyor system that can be used to differentiate between metallic and non-metallic materials, as well as to perform transferring of the mentioned materials. The project should be started by means of research on metallic waste sorting machines in the market like magnetic conveyor system.

A conveyor system is mechanical handling equipment that moves materials from one location to another and magnetic pulley has been used to separate metal and non-metal waste. Standard design process flow is to be followed e.g. conceptual design and detailed design to be produced prior to the fabrication.

VIII. ACKNOWLEDGEMENT

We express our special thanks and gratitude to our project guide to Prof.Shrikant Jadhav for full support &co-operation in our project. We are very thanks full to RUDRA ENTERPRISES PVT. LTD., PUNE for their kind co-operation. We have great pleasure express to co-guide Mr.Dhiraj from RUDRA ENTERPRISES PVT. LTD., & Deep sense of gratitude to Prof.Shrikant Jadhav& Prof. Prakash Gaikwad for their sterling efforts & inspiration in all phases of project work. We are especially thanks full to our Principal Dr. P.K. Srivastava & staff of Mechanical Engg. Dept.for their support. Lastly, we are thankful to Mr.Dhiraj from RUDRA ENTERPRISES PVT. LTD. Who contributed technical help to this project.And also thanks to those people who directly and indirectly help us for completing our project.

IX. REFRENCES

– A Study Of The Scrap Metal Trade In The Kumasi Metropolitan Area By: KwasiBroni-sefah

– Belt Conveyor Design by T. K. Ray (System Design).

– International Journal of Emerging Technology and Advanced Engineering Website: www.ijetae.com (ISSN 2250-2459, ISO 9001:2008 Certified Journal, Volume 3, Issue 4, April 2013) 10 Conceptual Design of Automatic Manipulator for Metal and Non-metal Waste Management Application.

– "A Brushless Permanent Magnet Motor With Integrated Torque-Limiter" by K. Atallah, S. D. Calverley, and D. Howe published in TRANSACTIONS ON MAGNETICS, VOL. 43, NO. 6, JUNE 2007.

– International Journal of Emerging Technology and Advanced Engineering Website: www.ijetae.com (ISSN 2250-2459, ISO 9001:2008 Certified Journal, Volume 3, Issue 4, April 2013)